Blind Aid using Radio Frequency Identification (RFID) and Ultrasonic sensors

Roopsai V, Selvarathinam S, Varun Krishna K.G.

***Abstract*—**This paper targets the use of RFID in assisting the visually challenged using voice assistance and also employing an Ultrasonic sensor design aiding in improved navigation. It explores the current ability and potential uses for this emerging technology. Of the 7 billion people that populate the world (UN, 2012), 285 million are visually impaired (WHO, 2012). Each visually impaired individual faces a unique and different set of challenges based on their specific level of vision. RFID has the potential to be a useful aid with further standardization of RFID tags and improvement of current RFID readers.

***Keywords*—**RFID Tag, RFID Reader, Ultrasonic sensors.

I. INTRODUCTION

RADIO Frequency Identification (RFID) has been an emerging technology in recent years. A basic RFID system consists of a reader and tags. The module is flexible that the number of objects to be identified can be altered according to the number of items present in the house. The objects will be attached with a RFID tag whose address is predetermined. The tag is the reference to the object. The product can be incorporated in the form of a glove which will be worn by the visually challenged and has a RFID reader. As and when the hand with the glove moves near an object, voice information of the object is played through a speaker attached on the glove due to the combined action of RFID tag, RFID reader and IC APR 9600 (Voice Recording IC). Studies are being extensively conducted to explore the use of RFID in the development of Blind Aid. RFID, or radio frequency identification, is one such technology that could be used to supplement organizational and navigational aids.

Roopsai V. is with the Department of Electrical and Electronics Engineering, R.M.D. Engineering College, Kavaraipettai, Chennai, Tamilnadu, India 601206. (Mobile: +91 9789909388, Email ID: vroopsai@gmail.com)

Selvarathinam S. is with the Department of Electrical and Electronics Engineering, R.M.D. Engineering College, Kavaraipettai, Chennai, Tamilnadu, India 601206. (Mobile: +91 9962244013, Email ID: svr.selva@gmail.com)

Varun Krishna K.G. is with the Department of Electrical and Electronics Engineering, R.M.D. Engineering College, Kavaraipettai, Chennai, Tamilnadu, India 601206. (Mobile: +91 9042902048, Email ID: varunkrishnakg@gmail.com)

RFID uses radio waves to communicate information between a tag, which stores information, and a reader, which interprets said information. The technology has also been used in the transportation of packages, as part of the luggage system in airports, in passports, and security access cards. While the RFID deals with the identification of objects, the Ultrasonic sensor fixed in the same glove and also in a spectacle worn by the person assists in navigation through the house with a separate voice output [1].

II. OVERVIEW

A given RFID system consists of two fundamental components: tags and readers. The reader and the tag communicate via the transmission of electromagnetic waves. A reader is used to magnetize the tag and receive the information from the tag. Tags store and process information, and can be extremely small, of the order of 3 mm. The key difference between the different types of tags on the market today lies in the power source and maximum range. A passive tag is solely dependent upon the reader for power, whereas an active tag has an internal battery that provides power. Based on figures gathered from multiple sources, active tags can effectively broadcast up to distances around 90-100+ feet, whereas passive tags are limited to around 10-20 feet maximum. However, the range on passive tags can be as little as a few centimeters. Another difference between the two types of tags is the way the signal is transmitted. Passive tags rely on the signal from the reader to transmit information, whereas active tags are able to transmit information to the reader independently. There is also the semi-active tag, which derives power for broadcasting from its reader, whereas an active tag uses the internal battery for all of its power requirements. The Ultrasonic sensors send ultrasonic waves continuously and reflect them when they hit upon the object. In this case, seven such sensors are used where two are fixed on either gloves and the remaining five are fixed in a certain design pattern on the spectacle. The Ultrasonic sensors on the glove are just used to indicate the presence of an object in front of the glove with a beep sound while the Ultrasonic sensor design in the spectacle is coupled to a microcontroller which is programmed to give directions through a voice output depending on the combination of the reflected Ultrasonic waves from the object.

III. EXECUTION AND WORKING OF RFID IN BLIND AID

The working of the product is split into three parts

1. Object detection.
2. Object identification and voice matching.
3. Voice output of the object concerned.

Object Detection:

The components used to carry out the detection function are:

1. Radio tag.
2. Radio frequency identification reader (RFID reader).

RFID Tag:

The tag has a sequence of metal pins or a bar code strip made of a magnetic material (differ from tags). The sequence of the metal pins or the bar code has a digital meaning behind it and it is unique to the particular tag. When the tag is interpreted or decoded, the sequence is displayed as numbers unique to the tag. Since it makes use of the Radio frequency interference technique, radio frequency helps in decoding the information.

RFID Reader:

The radio frequency used to decode the data in the RFID tag is produced by the RFID reader. When a radio frequency wave interacts with an RFID tag, the pins or the bar code energizes and produces its own magnetic field which has a unique interference pattern which when read by the RFID reader would obtain the unique number designated to the corresponding RFID tag. Thus the RFID reader obtains the address of the desired RFID tag (the address defers from each tag). This identified tag when attached to a real object (example: table) will be the reference to that object. Thus the object is indirectly detected [2].

IV. BLOCK DIAGRAM

The basic block diagram of the proposed model is shown in Fig. 1. It consists of 5 main blocks, (a) Object referred by RFID tag (b) RFID Reader (c) Microcontroller (d) Voice Recorder (e) Speaker.

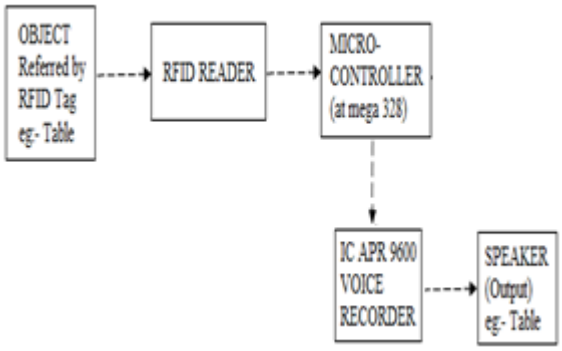

Fig. 1 Basic Block diagram

V. DESCRIPTION

The reliability of the RFID reader is often put to debate. On analysis, it was found that the readers were acceptable in terms of reliability/consistency. However on further progression, the sensitivity of each reader to the angle at which it was applied to the tag when scanning was relatively inconsistent, which is not surprising given the nature of wireless technology in general. Despite this, there were generally few failed scanning attempts making the RFID technology for the development of Blind Aid a reality.

VI. FIGURE DESCRIPTION

The working of an RFID device can be illustrated as shown below.

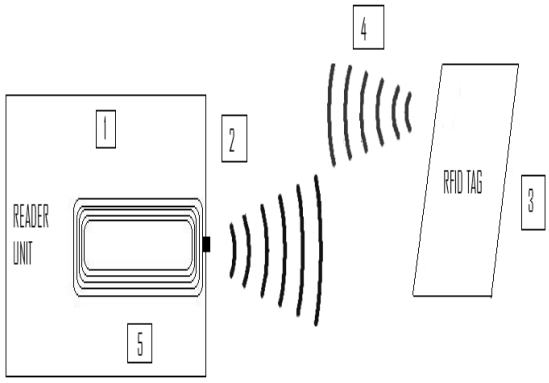

Fig. 2 RFID working

1. The processor controlling RFID sending/ receiving.
2. The antenna sending high frequency electromagnetic waves out.
3. The transponder or tag which converts the waves into an electric current.
4. The tag responding with its own unique radio wave.
5. The reader unit receiving the tag's wave, which is then processed to retrieve information.

VII. PULSE CODE MODULATION

Employing the technique of Pulse Code Modulation, the radio wave is approximated to an equivalent discrete voltage levels.

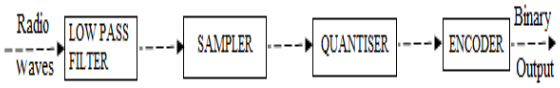

Fig. 3 Pulse Code Modulation

Fig. 3 shows the transmitter section of a Pulse Code Modulator. With reference to Fig. 2, the high frequency radio waves are sent by the antenna. These waves are processed through a Pulse Code Modulator and a binary output is

obtained.

The voltage levels are converted into Binary format using an Encoder.
A hexadecimal equivalent is generated using a 'Binary-Hexadecimal' algorithm.

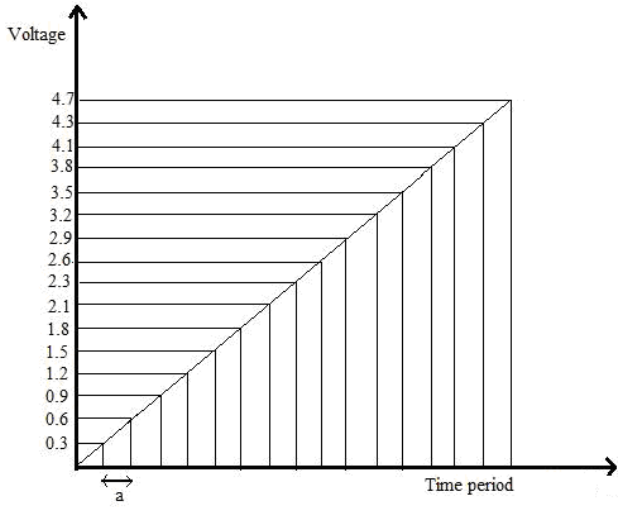

Fig. 4 Graphical representation of PCM

Fig. 4 is the graphical representation of the interpreted wave which is the output of Pulse Code Modulator.

The equivalent binary data for the obtained voltage levels are tabulated below.

0.3 - 0.6 = 0001
0.6 - 0.9 = 0010
0.9 - 1.2 = 0011
..
4.5 - 4.8 = 1111

It points to the address of the tags referring to the object as mentioned in the Figure description above. This address is used in the Microcontroller later.
(Example: 4DCE1254AB87)

VIII. CIRCUIT DIAGRAM

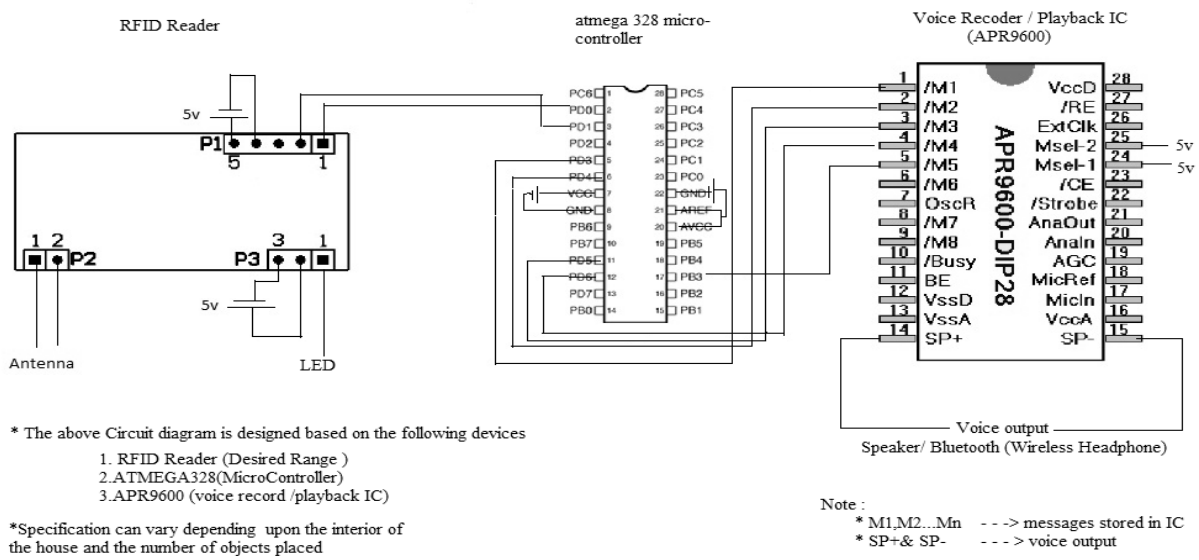

Fig. 5 Circuit representation

Fig. 5 illustrates the overall circuit diagram of the entire process. The RFID module detects the code which is the reference to the RFID tag. The detected code is compared in the Micro-controller and activates the corresponding pins in the Voice Recorder/Playback IC (example: APR 9600) at ground potential voice information of the object is played through an output device.

IX. NAVIGATION

Outdoor Navigation:

There has been promising research into RFID to aid the blind for outdoor navigation. While GPS has been tried in the past to make getting around cities and towns easier, this has not been very effective because of the lack of accuracy and a slow response time. Early research has shown promising results for RFID as a replacement or supplement to GPS. As a blind or visually impaired person passes by with the RFID reader, the tag audibly announces the information stored on it. In addition, handheld RFID reader and high frequency tags placed at bus stops and on the busses enables the user to scan the tag to determine the bus routes and destinations and when the bus is arriving. There has been promising research into RFID to aid the blind for outdoor navigation. While GPS has been tried in the past to make getting around cities and towns easier, this has not been very effective because of the lack of accuracy and a slow response time. Early research has shown promising results for RFID as a replacement or supplement to GPS. As a blind or visually impaired person passes by with the RFID reader, the tag audibly announces the information stored on it. In addition, handheld RFID reader and high frequency tags placed at bus stops and on the busses enables the user to scan the tag to determine the bus routes and destinations and when the bus is arriving.

Indoor Navigation:

Indoor RFID technology has seen some major developments in recent years. The RFID tags are placed as a reference to the objects in the house. As the user walks through, the RFID reader obtains the address of the desired RFID tag (the address defers from each tag) and due to combined action of the reader, microcontroller and voice recording IC the information is audibly sent to the user of the next direction they should take to get to their desired location. However using RFID for navigation is not a viable option due to various constraints like interference and complexity. Hence to overcome these constraints, an RFID circuit is combined with an **Ultrasonic sensor** for effortless navigation.

Ultrasonic Sensor:

Object detection has been successful by using the RFID tag and reader as mentioned above. However traversing oneself through the house becomes complex when RFID concept is employed because the electromagnetic field spreads in all the directions (360 degrees). This results in programming complexity in the Microcontroller. Hence to overcome the error, an ultrasonic sensor design is used for effortless navigation. The Ultrasonic waves traverse in a straight path unlike electromagnetic field.

Advantages of using Ultrasonic sensors:

1. Cheap
2. Less weight and size

The design pattern:

There are two sets of Ultrasonic sensors:

The **first set** of sensors is employed in either glove to help the person evade the obstacle anywhere in front of him on the ground.

The **second set** of sensors is a combination of five sensors attached in a certain pattern on the spectacle worn by the visually challenged person which helps him to traverse through the house with the aid of voice assistance.

Evading Obstacles using the glove:

It is the same glove in which the RFID reader circuit is integrated. The Ultrasonic sensors are attached on the glove which is worn by the visually challenged. The sensor sends Ultrasonic waves continuously. Whenever an obstacle is encountered, the visually challenged is notified by a beep sound from the buzzer attached to the glove. This process is implemented by burning a suitable program to the Microcontroller fixed in the glove and the output is connected to a buzzer. The range is adjusted according to the person's height in such a way that the floor is not reached by the Ultrasonic wave to identify it as an obstacle. So whenever the person moves his hands before him while walking, he is notified with a sound in the case of an object or else the buzzer remains silent. This helps in improved and quick navigation.

Navigation using Ultrasonic design pattern

This design is independent of the glove. The sensor pattern is designed to be worn as a spectacle by the visually challenged. The positioning of the sensor is as shown in the figure below. The inclination of the sensors is standardized and a fixed one. The size of the spectacles is half the size of the shoulder-shoulder distance. This construction and its adjoining program ensure that the person is evaded even from an object which is as small as the size of the sensor. Depending on the movement of the head, the voice output from the voice recorder and playback IC attached to the spectacles changes according to the obstacle ahead.

Note: Since the designing and its algorithm is created to avoid the most complicated orientation of obstacles (prevalence is rare), its performance is enhanced in a normal house.

The configuration of D-2D (Fig. 6) dimension of the sensor pattern helps in obtaining a "plane of safety" (as mentioned in the figure below) of 38% from the person's eye. This makes sure that even the thinnest of objects cannot traverse beyond the "plane of safety".

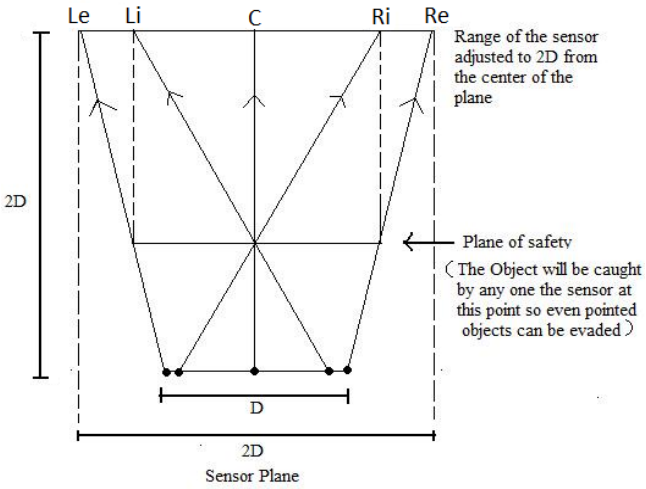

Fig. 6 Plane diagram

The sensors are arranged in a plane as shown in the Fig. 6. Ultrasonic sensor corresponding to R(e)- Right extreme, R(i)- Right intermediate, C- Centre, L(e)- Left extreme, L(i)- Left intermediate.

Algorithm:

Case 1: All the five sensors are ON.
  1.1: Move ahead.
Case 2: Four sensors ON.
  2.1: If R(e) or R(i) is OFF, move left.
  2.2: Else If L(i) or L(e) is OFF, move right.
  2.3: If C is OFF move right or left.
Case 3: Three sensors ON.
  3.1: If R(i), R(e) and C are ON, move right.
  3.2: Else If L(i), L(e) and C are ON, move left.
  3.3: Else turn right or left depending on the majority of sensor.
Case 4: Two sensors ON.
  4.1: If L(i) and L(e) are ON, move right.
  4.2: If R(i) and R(e) are ON, move left.
  4.3: Else If C and r(i)or l(i)is ON, narrow path is ahead. Nod your head.
  4.4: Else turn right or left.
Case 5: One sensor is ON.
  5.1: If R(i) or R(e) is ON, move right.
  5.2: If L(i) or L(e) is ON, move left.
  5.3: If C is ON, move straight.

Note: The above algorithm is developed into a suitable coded language (C Program) and burnt to a new Microcontroller attached to the spectacle.

X. CONCLUSION

The design of the proposed RFID system and Ultrasonic sensors for the aid of visually challenged has been presented in this paper. The design presented here would be effective in providing an improved life for the vision deprived people.

ACKNOWLEDGMENT

The authors would like to extend their profound thanks to their Parents, the College Management, Staff and Friends for their support and encouragement in making this paper a reality.

REFERENCE

[1] Tom Igoe, "Getting started with RFID"
[2] Daniel M. Dobkin, "The RF in RFID"
[3] Klaus Finkenzeller, "RFID Handbook"